COLORLITES
CLEAR & COLOURED GLASS

TECHNICAL DRAWING

PRODUCT	**10ml Black Dropper**
PRODUCT CODE	**10051**

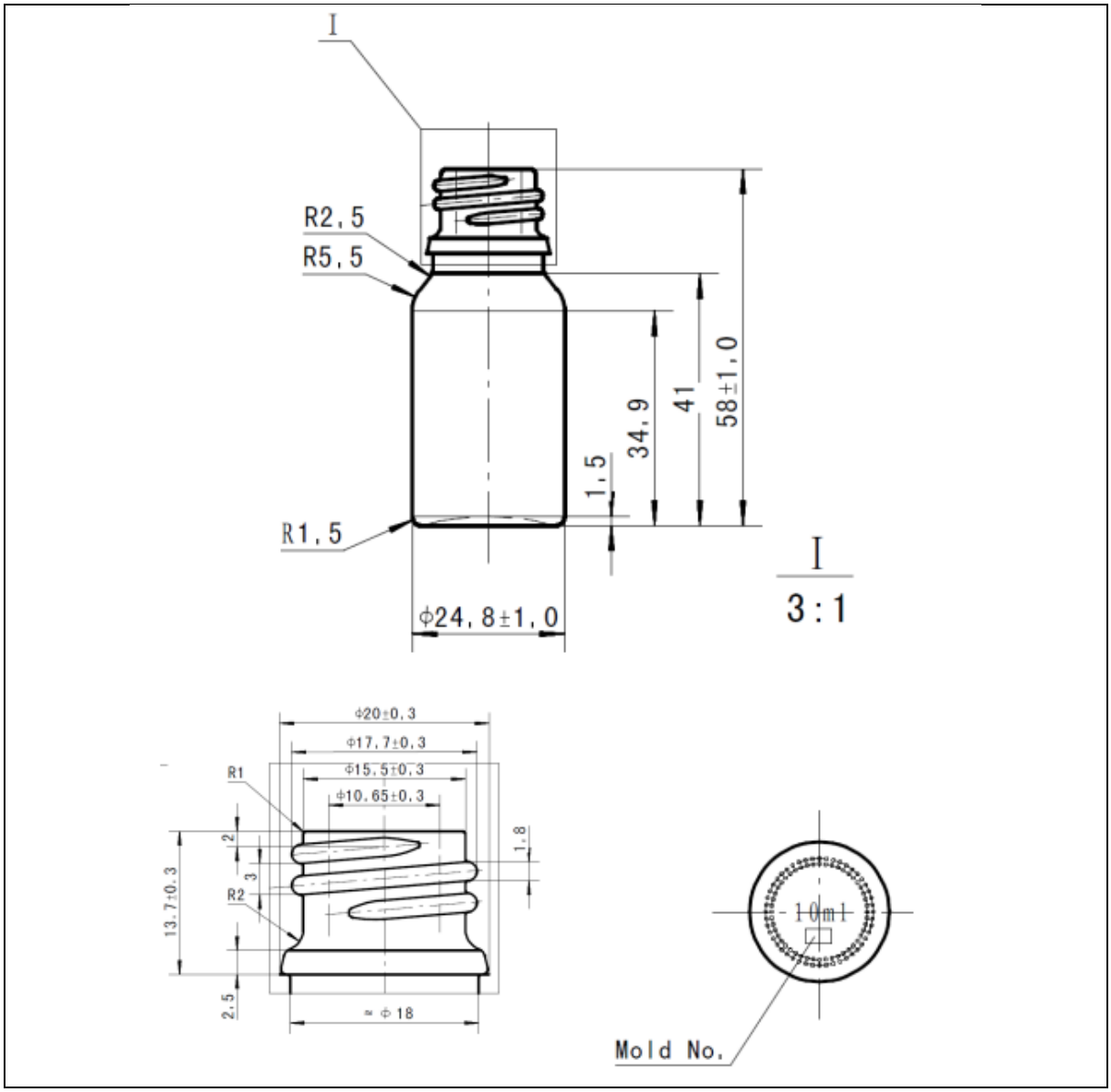

PRODUCT SPECIFICATION DETAILS:

Date of Drawing	10/03/23
Scale	Not to scale
Glass weight (g) (Approx)	27.5
Finish	N/A
Additional Information	N/A
Material composition	Soda Lime Glass
Material recyclable?	Yes (check with local waste collection provider)